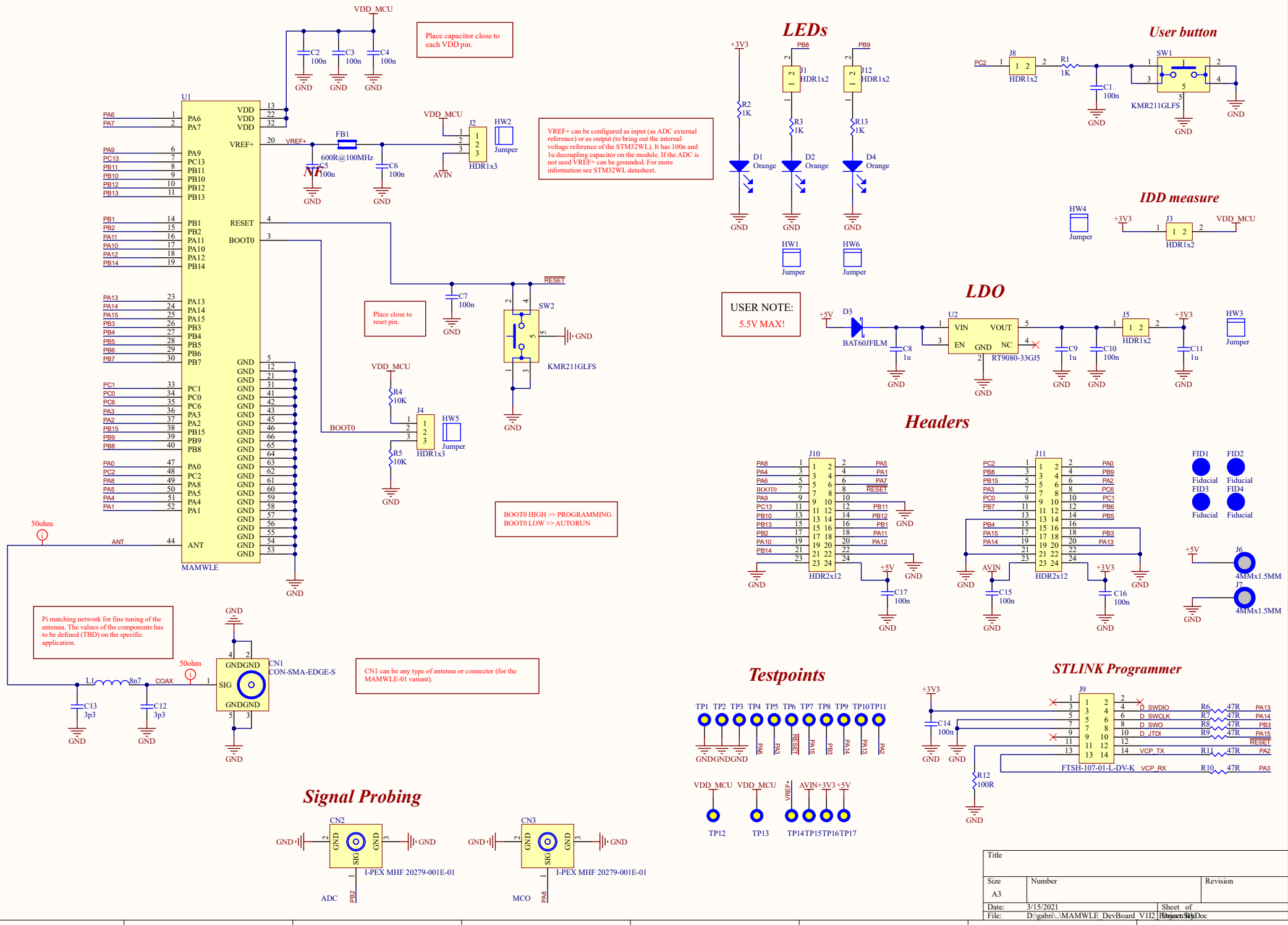
LEDs
User button
IDD measure
LDO
Headers
Testpoints
STLINK Programmer
Signal Probing
Place capacitor close to each VDD pin.
VREF+ can be configured as input (as ADC external reference) or as output (to bring out the internal voltage reference of the STM32WL). It has 100n and 1u decoupling capacitor on the module. If the ADC is not used VREF+ can be grounded. For more information see STM32WL datasheet.
Place close to reset pin.
USER NOTE:
5.5V MAX!
BOOT0 HIGH >> PROGRAMMING
BOOT0 LOW >> AUTORUN
Pi matching network for fine tuning of the antenna. The values of the components has to be defined (TBD) on the specific application.
CN1 can be any type of antenna or connector (for the MAMWLE-01 variant).
U1
MAMWLE
J2
HDR1x3
J4
HDR1x3
J8
HDR1x2
J3
HDR1x2
J5
HDR1x2
J10
HDR2x12
J11
HDR2x12
J9
FTSH-107-01-L-DV-K
CN1
CON-SMA-EDGE-S
CN2
CN3
I-PEX MHF 20279-001E-01
SW1
SW2
KMR211GLFS
U2
RT9080-33GJ5
D3
BAT60JFILM
J6
J7
4MMx1.5MM
FID1
FID2
FID3
FID4
Fiducial
Title
Size
A3
Number
Revision
Date: 3/15/2021
Sheet of
File: D:\gabri\..\MAMWLE_DevBoard_V1I2.PrjPcb
Drawn by: